GUARDIAN
DOUBLE CONTAINMENT

Submittal Data Sheet

Job or Customer: .....

Engineer: .....

Contractor: .....

Submitted by: ..... Date

Approved by: ..... Date

Order No: ..... Date

Specification: .....

introduction

COMPANION PRODUCTS

Centra-Guard™

Double Containment Leak Detection System

PIPE CARRIER MATERIAL		PIPE CONTAINMENT MATERIAL	
PVC & CPVC			
PVC White Sch 40	❑	PVC White Sch 40	❑
PVC Grey Sch 80	❑	PVC Grey Sch 80	❑
PVC Clear Sch 40	❑	PVC Clear Sch 40	❑
PVC Clear Sch 80	❑	PVC Clear Sch 80	❑
CPVC Grey Sch 40	❑	CPVC Grey Sch 40	❑
CPVC Grey Sch 80	❑	CPVC Grey Sch 80	❑

FITTING CARRIER MATERIAL		FITTING CONTAINMENT MATERIAL	
PVC & CPVC			
PVC DWV	❑	PVC DWV	❑
PVC Grey Sch 80	❑	PVC White Sch 40	❑
CPVC Grey Sch 80	❑	PVC Grey Sch 80	❑
		PVC Clear Sch 40	❑
		CPVC Grey Sch 80	❑

CARRIER SIZE			CONTAINMENT SIZE	
1/2"	❑	x	2"	❑
3/4"	❑	x	3"	❑
1"	❑	x	3"	❑
1-1/2"	❑	x	4"	❑
2"	❑	x	4"	❑
3"	❑	x	6"	❑
4"	❑	x	8"	❑
6"	❑	x	10"	❑
8"	❑	x	12"	❑
10"	❑	x	16"	❑
12"	❑	x	18"	❑
16"	❑	x	24"	❑
18"	❑	x	24"	❑

Guardian systems offer a complete selection of pretested modular components which are extremely easy to install. Our Centra-lok™ patented design allows IPEX to offer vinyl systems which average up to 60% fewer overall joints and up to 10% fewer field joints. Since joints are always the most common source of premature failures and leaks, it is easy to realize the immense impact the Centra-lok design has on maintenance, repair and installation costs. The patented ingenuity and simplicity of the Centra-lok design also reduces the purchase cost of IPEX systems, making Guardian the industry's most cost-effective vinyl system.

As with all our containment systems, the IPEX patented Centra-Guard™ point-of-collection or cable leak detection systems are also available.

pipe and fitting availability

PIPE

The pressure rated system is available in any combination of Vinyl by Vinyl and comes in a size range of 1/2" x 2" to 12" x 18" (Carrier x Containment) in Sch 40 or Sch 80.

However, CPVC containment is only available upto 16" and PVC Clear containment is only available upto 10".

A DWV system is also available in PVC by PVC and comes in a size range of 1-1/2" x 4" to 12" x 18" (Carrier x Containment).

FITTINGS

PRESSURE SYSTEM	DWV
Tee	90° elbow
90° Elbow	Sanitary Tee
22-1/2° Elbow 45° Elbow Ball Valve Check Valve	Wye Wye with 1/8 bend P Trap Reducer / Increaser Cleanout Floor Drain

Standard fitting offering shown above.
Other fittings are available upon request. Contact factory.

DAINNAIP070806

CDN Toll Free: 866-473-9462
www.ipexinc.com

U.S. Toll Free: 800-463-9572
www.ipexamerica.com

IPEX

Installation

PVC and CPVC

1. Square cut pipe using a saw and miter box or plastic tube cutter. Remove all burrs from both the inside and outside edge of the pipe with a knife, file or reamer bevel all ends. Remove dirt, grease and moisture. A thorough wipe with a clean, dry rag is usually sufficient. Check dry fit. Pipe should insert easily into socket, approximately 1/4 to 3/4 of the total socket depth.

2. Using a suitable applicator, apply an approved primer to the socket of the fitting. (Care should be taken not to allow primer to puddle in fitting socket.) Next, apply primer to pipe surface equal to the depth of the fitting socket. Apply primer again to fitting socket. (Primer is used to soften the surfaces of pipe and fitting, making them suitable for solvent cementing.) Continue to next step immediately.

3. With the same type of applicator, apply a full, even coat of an approved solvent cement to the pipe equal to the depth of the fitting socket. Coat the fitting socket with a medium layer of cement. (Care should be taken not to allow cement to puddle in fitting socket). Apply a second, full, even layer to the pipe. Cement must be applied in sufficient quantities to fill the joint.

4. Without delay assemble while cement is still wet. Use sufficient force to ensure that pipe bottoms in socket. If possible, twist the pipe or fitting 1/8 to 1/4 turn as assembled.

   Hold together for about thirty seconds to make sure joint does not separate. With a rag, wipe off excess cement. Avoid disturbing the joint.

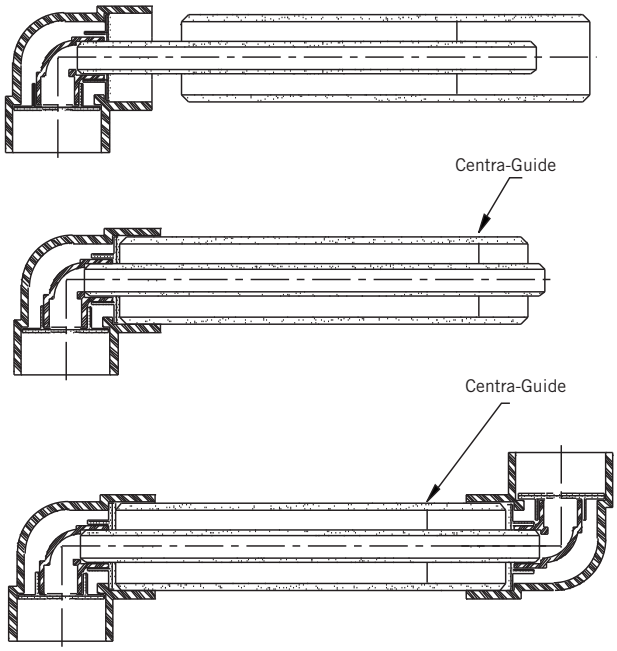

Simultaneous Solvent Cementing

1. Determine proper carrier and containment pipe lengths to achieve desired center-to-center dimension. Cut to size and prep ends.

2. Prime and solvent cement carrier pipe to carrier fitting socket.

3. Prime and solvent cement containment pipe to containment socket.

4. Install Centra-guide support at pipe's end. Distance between the fitting and support should not exceed 5 feet. Install additional supports if required.

5. Dry-fit fitting to pipe end to ensure proper fit and alignment. Mark containment pipe to ensure full insertion during simultaneous solvent cementing.

6. Apply primer and solvent cement to carrier and containment hubs and pipe ends. Position fitting onto pipe ends, making sure fitting bottoms out completely.

Termination Fittings

Style A

Install containment pipe socket flange using standard procedure. Always bevel carrier pipe end or damage to the o-rings will occur. The blind flange can be ordered with taps to allow for venting, draining, etc.

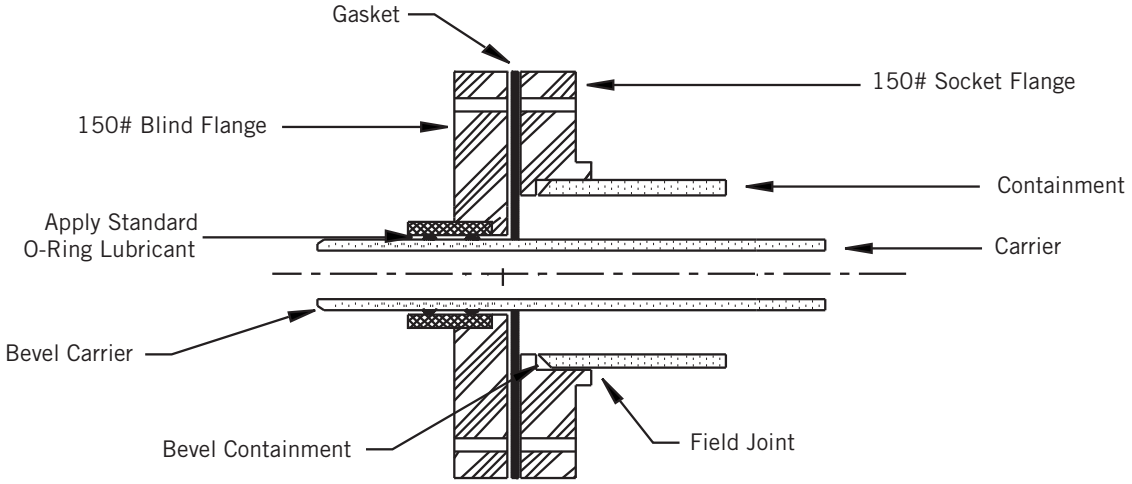

Style B

PVC and CPVC termination fittings are supplied as one-piece components, complete with carrier pipe o-rings. Always bevel carrier pipe end or damage to the o-rings will occur. Prime both the containment pipe and socket of termination fitting. Apply cement to both containment pipe and termination socket and slide into position, rotating 1/8 to 1/4 turn. Allow 24 hours cure time prior to testing. The fitting can be ordered with taps to allow for venting, draining, etc. Do not apply primer or solvent cement to o-rings.

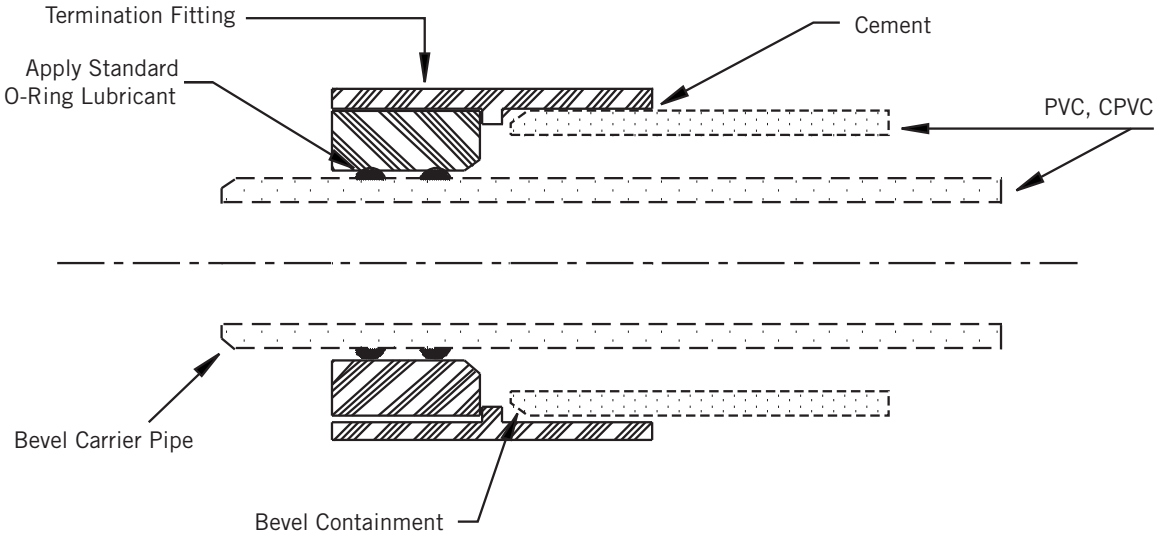

Cleaning and Testing

Upon completing installation, the primary piping system shall be hydrostatically tested at 150% of the system design pressure for a period of one hour. Additionally, the system may be tested during the installation at intervals to be determined by the manufacturer (IPEX).

If Secondary pipe cannot be hydro-tested, as determined by the engineer or authority having jurisdiction, then the use of nitrogen or air at a MAXIMUM 5 psi (gauge) shall be allowed. The external joint should be visually inspected for leaks using an **IPEX approved leak detector only**.

Both the preliminary and final tests shall be performed in strict accordance with the recommendations of the manufacturer (IPEX) including the sequence and duration of such tests.

WARNING

It is imperative that a working-pressure regulator be used during the pneumatic test to ensure that over-pressurization of the PVC, beyond 5 psi, cannot occur. The following must also be noted: Air or nitrogen under pressure is compressed and therefore poses a potential hazard. If a failure of the pipe or fitting occurs during such test, the air exits at the failure point and expands rapidly. This increase in velocity can cause the system to fail in a catastrophic mode. Therefore during such air test all personnel involved in the test or present in the test surrounding area must be aware of such a possibility and take all necessary precautions. Precautions include, but are not limited to, taking extreme care not to impact or damage the system in any way. Such procedure is a limited exception to IPEX standard policy which forbids the use of its rigid systems with any compressed gases, unless the product(s) is specifically designed for the conveyance of compressed gases.

PVC DOUBLE CONTAINMENT PIPING SYSTEM

GENERAL

Scope of Work

Furnish all labor, materials, equipment and incidentals required to install a Guardian PVC (Primary) / PVC (Secondary) double containment piping, valves and appurtenances for complete systems as shown on the drawings and as specified herein.

Description of Systems

_____% Chemical Names (To be inserted)

Submittals

Shop drawings shall be submitted to the engineer and include details of pipe fabrications (including supporting devices, method of attachment, spacing, etc.), prefabricated double containment fitting dimensions, starting and terminating connections, high-point vent and low-point drain details for the secondary containment, valves and accessories. Submit joint details, methods and location of supports, and all other pertinent technical data for all piping to be furnished.

Qualifications

The double containment piping system shall be a Guardian prefabricated system as manufactured by IPEX. The system shall be fabricated, installed and tested in accordance with IPEX's recommendations and as specified herein and shall be suitable for the intended service. Contractors shall have installation training by manufactuer or qualifed representative prior to installation. Manufacturer shall have a minimum of five (5) years experience. Contractor shall not design and/or fabricate the piping system.

PRODUCTS

General

Each contained piping system shall consist of Xirtec®140 PVC primary piping system supported within a Xirtec®140 PVC secondary containment housing. Carrier fitting sizes 1/2" through 4" will use Centra-Lok [U.S. Patent No. 5,398,973] molded supports minimizing the number of field (factory assembled) fitting joints. Carrier sizes 6" and larger will use IPEX standard polypropylene fitting discs to support and centralize. Each system shall be provided with suitable drains and vents and be designed to provide complete drainage of both the primary and secondary containment piping. Interstitial supporting devices shall be made from Polypropylene Centra-Guide supports and shall be provided within the secondary containment pipe, and shall be designed to allow continuous drainage in the annular space to the drain points. Drain fittings shall be designed to allow a valve attachment to be made so that the secondary containment compartment may be readily drained and manually checked for leaks.

Materials

The primary pipe and fittings shall be manufactured from Xirtec140 DWV, schedule 40, or schedule 80 PVC materials as manufactured by IPEX and as listed by ASTM and ANSI.

The secondary containment pipe and fittings shall be manufactured from Xirtec 140 DWV, schedule 40, or schedule 80 PVC materials as manufactured by IPEX And as listed by ASTM and ANSI.

All listed primary pipe shall be shall be Xirtec 140 DWV, schedule 40 or schedule 80 materials. Pipe shall have DWV thickness according to ASTM D-2665, schedule 40 thickness according to ASTM D-1785, or schedule 80 thickness according to ASTM D-1785. All listed primary pressure fittings shall be schedule 40 PVC according to ASTM D-2466, or schedule 80 PVC according to ASTM D-2467 specifications. All other unlisted components intended for use as pressure retaining components shall have sufficient thickness and reinforcement so as to be able to maintain the same pressure ratings as the equivalent DWV or schedule PVC pipe. Interstitial supporting devices used to center and support the primary piping within the secondary containment piping shall be manufactured from Polypropylene Centra-Guide supports, according to ASTM and ANSI.

All listed secondary containment pipe and fittings shall be IPEX's Xirtec140 DWV, schedule 40, or schedule 80 materials as manufactured by IPEX. Pipe shall have DWV thickness according to ASTM D-2665, schedule 40 thickness according to ASTM D-1785, or schedule 80 thickness according to ASTM D-1785. All listed pressure fittings shall be schedule 40 according to ASTM D-2466 or schedule 80 according to ASTM D-2467. All other unlisted components intended for use as pressure retaining components shall have sufficient thickness and reinforcement so as to be able to maintain the same pressure ratings as the equivalent DWV or schedule PVC pipe.

All fittings will be pre-assembled (1/2" through 4" carrier fittings will be supported with the Centra-Lok [U.S. Patent No. 5,398,973] system, 6" and larger carrier will be supported with IPEX standard Polypropylene fitting discs) and pre-tested by the manufacturer (IPEX).

CPVC DOUBLE CONTAINMENT PIPING SYSTEM

GENERAL

Scope of Work

Furnish all labor, materials, equipment and incidentals required to install a Guardian CPVC (Primary)/CPVC (Secondary) double containment piping, valves and appurtenances for complete systems as shown on the drawings and as specified herein.

Description of Systems

_____% Chemical Names (To be inserted)

Submittals

Shop drawings shall be submitted to the engineer and include details of pipe fabrications (including supporting devices, method of attachment, spacing, etc.), prefabricated double containment fitting dimensions, starting and terminating connections, high-point vent and low-point drain details for the secondary containment, valves and accessories. Submit joint details, methods and location of supports, and all other pertinent technical data for all piping to be furnished.

Qualifications

The double containment piping system shall be a Guardian prefabricated system as manufactured by IPEX. The system shall be fabricated, installed and tested in accordance with IPEX's recommendations and as specified herein and shall be suitable for the intended service. Contractor shall have installation training by manufacturer or qualified representative prior to installation. Manufacturer shall have a minimum of five (5) years experience. Contractor shall not design and/or fabricate the piping system.

PRODUCTS

General

Each contained piping system shall consist of Corzan® CPVC primary piping system supported with a Corzan® CPVC secondary containment housing. Carrier fitting sizes 1/2" through 4" will use Centra-Lok [U.S. Patent No. 5,398,973] molded supports minimizing the number of (factory assembled) fitting joints. Carrier sizes 6" and larger will use IPEX standard polypropylene fitting discs to support and centralize. Each system shall be provided with suitable drains and vents and be designed to provide complete drainage of both the primary and secondary containment piping. Interstitial supporting devices shall be made from Polypropylene Centra-GuideTM supports and shall be provided within the secondary containment pipe, and shall be designed to allow continuous drainage in the annular space to the drain points. Drain fittings shall be designed to allow a valve attachment to be made so that the secondary containment compartment may be readily drained and manually checked for leaks.

Materials

The primary pipe and fittings shall be manufactured from Corzan schedule 80 CPVC materials as manufactured by IPEX and as listed by ASTM and ANSI.

The secondary containment pipe and fittings shall be manufactured from Corzan schedule 40 or schedule 80 CPVC materials as manufactured by IPEX. And as listed by ASTM and ANSI.

All listed primary pipe shall be shall be Corzan schedule 40 or schedule 80 materials. Pipe shall have schedule 40 or schedule 80 thickness according to ASTM F-441 All listed primary pressure fittings shall be schedule 80 CPVC according to ASTM F-439 specifications. All other unlisted components intended for use as pressure retaining components shall have sufficient thickness and reinforcement so as to be able to maintain the same pressure ratings as the equivalent schedule CPVC pipe.

Interstitial supporting devices used to center and support the primary piping within the secondary containment piping shall be manufactured from Polypropylene Centra-Guide supports, according to ASTM and ANSI.

All listed secondary containment pipe and fittings shall be IPEX's Corzan® schedule 40, or schedule 80 materials as manufactured by IPEX. Pipe shall have schedule 40 or schedule 80 thickness according to ASTM F-441. All listed pressure fittings shall be schedule 80 according to ASTM F-439. All other unlisted components intended for use as pressure retaining components shall have sufficient thickness and reinforcement so as to be able to maintain the same pressure ratings as the equivalent schedule CPVC pipe.

All fittings will be pre-assembled (1/2" through 4" carrier fittings will be supported with the Centra-Lok [U.S. Patent No. 5,398,973] system, 6" and larger carrier will be supported with IPEX standard Polypropylene fitting discs) and pre-tested by the manufacturer (IPEX).

GUARDIAN
DOUBLE CONTAINMENT

Specifications

PROPERTIES	MATERIALS			Standards
	PVC	CPVC (Standard)	CPVC (High Impact)	
Cell classification	12454	23447	24448	
Specific gravity	1.42	1.50	1.51	ASTM D 792
Tensile strength, psi at 73°F	7,000	7,500	7,320	ASTM D 638
Modulus of elasticity tensile, psi at 73°F	400,000	380,000	360,000	ASTM D 638
Flexural strength, psi	14,500	11,400	13,200	ASTM D 790
Izod impact, ft.lbs./in. at 73°F, notched	0.65	2.0	10.0	ASTM D 256
Compressive strength, psi	9,000	10,100	10,100	ASTM D 695
Poisson's ratio	0.38	0.33	0.33	
Working stress, psi at 73°F	2,000	2,000	2,000	
Coefficient of thermal expansion in./in./°F (x 10^{-5})	3.0	3.8	3.4	ASTM D 696
Linear expansion, in./10°F per 100' of pipe	0.36	0.44 - 0.46	0.41	
Maximum operating temperature under pressure	140ºF (60ºC)	200ºF (93ºC)	200ºF (93ºC)	
Deflection temperature under load, °F at 66 psi	173	n/a	n/a	ASTM D 648
Deflection temperature under load, °F at 264 psi	160	212	239	ASTM D 648
Thermal conductivity, BTU.in./hr.ft^2.°F	1.2	0.95	0.95	ASTM C177
Burning rate	Self extinguish	Self extinguish	Self extinguish	ASTM D 635
Burning class	V-0	V-0	V-0	UL-94
Flash ignition, °F	730	900	900	
Limited oxygen index (%)	43	60	60	ASTM D 2863-70
Water absorption, %, (24 hrs. at 73°F)	0.05	0.03	0.03	ASTM D 570

* The properties listed in this table represent general material properties and should be used as a guideline only.

Notes

Products manufactured by IPEX Inc. and distributed in the United States by IPEX USA LLC.
Centra-Guard™ is a trademark of IPEX Inc.
Corzan® is a registered trademark of the Lubrizol Corporation.